controldesign.com

control design
FOR MACHINE BUILDERS

Engineers' Guide to AS-Interface

SPONSORED BY

Bihl + Wiedemann

PutmanMedia®

TABLE OF CONTENTS

Bihl + Wiedemann

AS-Interface

A complete solution for your automation needs

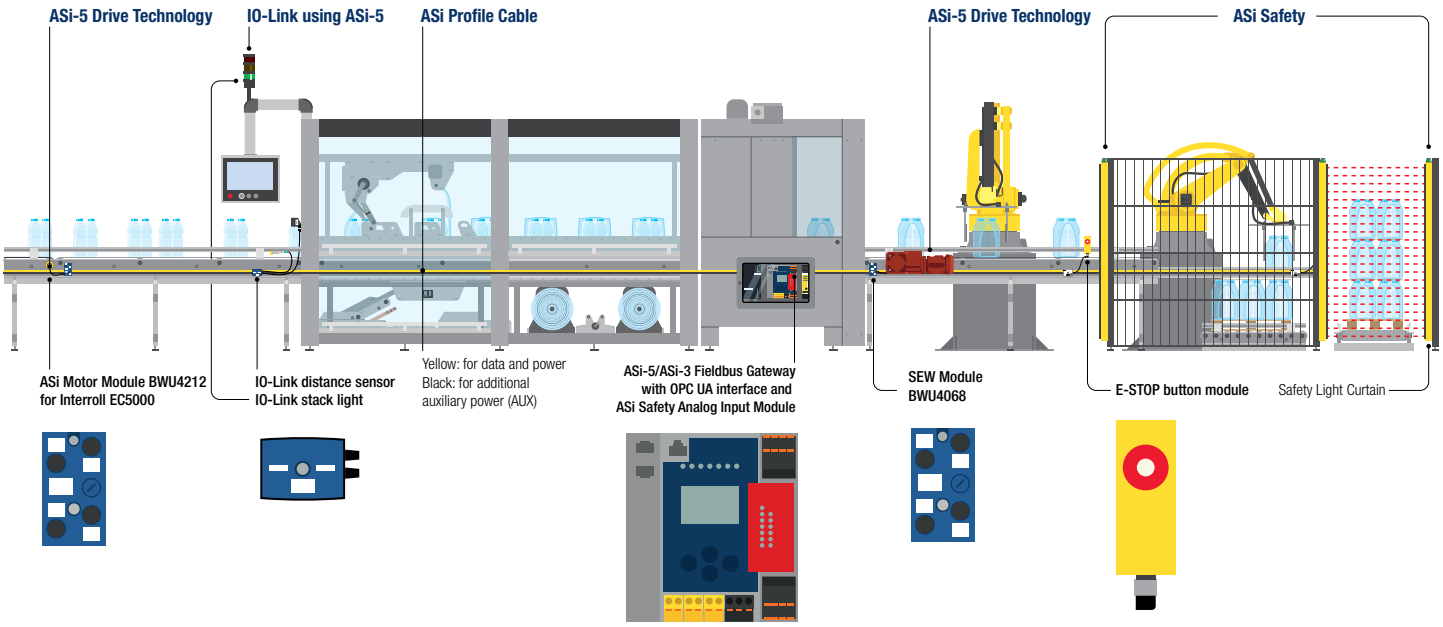

Call us for more information

616-345-0680

Or visit us on our homepage
www.bihl-wiedemann.com

What is AS-Interface?

By Bihl+Wiedemann

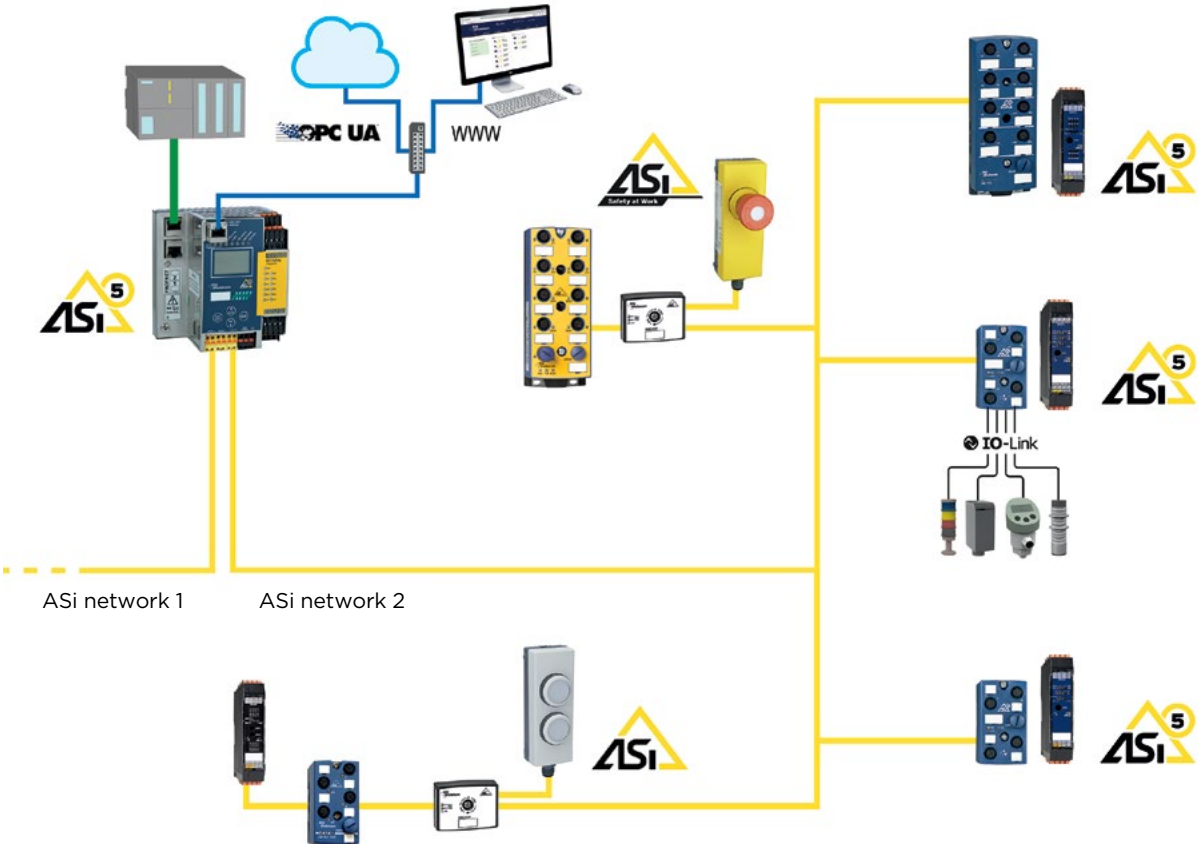

DATA AND POWER THROUGH ONE SINGLE CABLE

The abbreviation ASi stands for Actuator-Sensor Interface. This interface connects the modules in the lowest process level in automation systems with each other. The usual cable trees are replaced by a single electrical cable—the ASi cable. This cable carries both data and power.

THE FOUR ASI COMPONENTS

Leading manufacturers around the world support this simple wiring system. It consists of four components: the master, the slaves, a power supply and the yellow ASi cable. Each slave has a unique address assigned to it which the master uses to exchange in- and output data. Piercing technology means the modules can be quickly and easily attached or moved on the ASi cable.

QUICKLY IDENTIFY AND FIX ERRORS

Diagnostic units or masters with built-in diagnostic functions make troubleshooting easier. Failed slaves can be quickly identified, replaced and automatically re-addressed by the master.

AN ALL-AROUND GOOD IDEA

In short: ASi is a system requiring little installation and maintenance effort, saving time and money. Additionally it is one of the simplest field busses, making its use possible without special knowledge.

SIMPLY A POWERFUL SYSTEM

ASi allows you to freely choose your topology. For example:

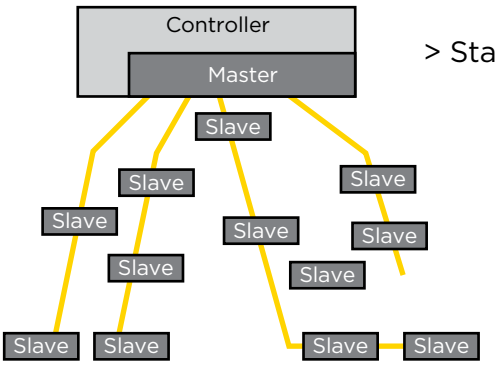

> Star topology

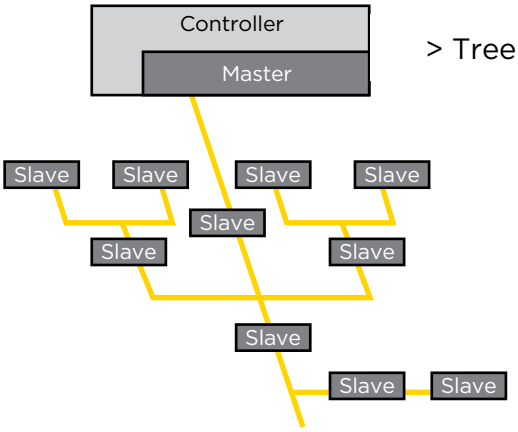

> Tree topology

SAFETY— SO PROBLEM-FREE

AS-Interface lets you allow safety-relevant (EN ISO 13849) and noise-immune installations.

INSTALLATION—SO SIMPLE

AS-Interface pioneered a clever installation technology with its unique flat cable. Simply insert cable, tighten down and you're done.

COMPATIBILITY—SO OPEN

Operate with virtually any bus system: PROFIBUS, PROFINET, CC-Link, EtherNet/IP and others.

COSTS — SO LOW

AS-Interface drastically reduces wiring and installation costs and makes expansion or retrofitting very simple.

AS-INTERFACE: MARKET AND FACTS

- There are more than 40 million active ASi devices worldwide
- 7 million of these are safety devices
- Over 2.000 certified products
- Safety relevant units with around 70% growth rate

COMPONENTS OF THE ASI NETWORK

AS-Interface Master

The AS-Interface Master connects sensors and actuators through the ASi slaves to the higher-level controller.

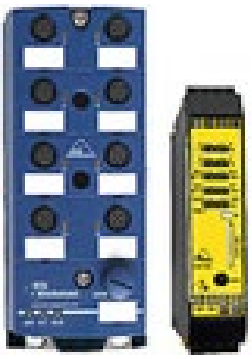

AS-Interface Slave

The AS-Interface Slave reports to the master, has its own address and up to four in- or outputs.

The Cable

The cable sends data and power over two conductors.

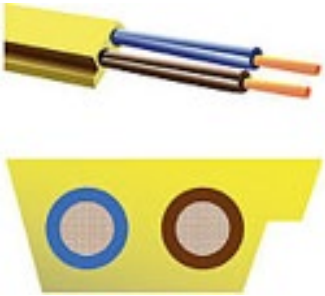

The Power Supply

The power supply supplies the ASi network with 30 Volts.

VERSATILITY

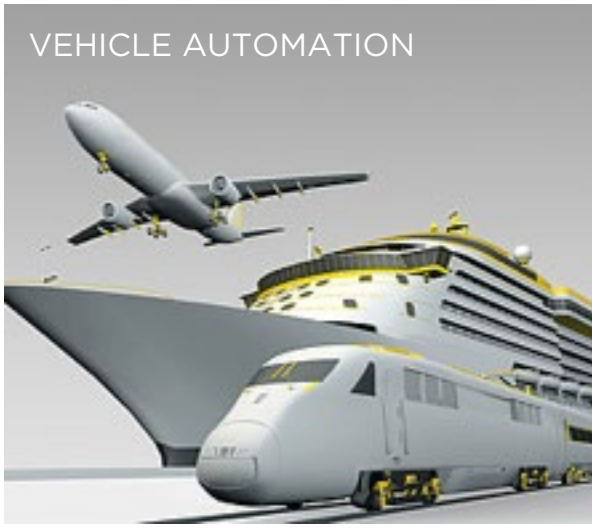

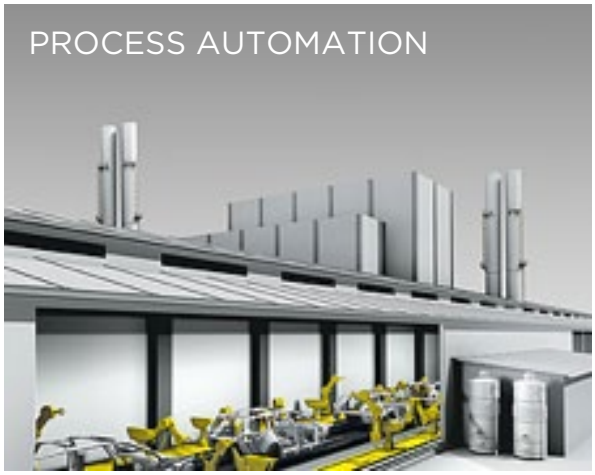

USE CASE OF ASI USING PRODUCTS FROM BIHL+WIEDEMANN

The brewery, which recently opened in April 2019, was designed and built by the brewery experts GEA Process Engineering A/S. All the brewery's processes including ASi Masters and motors are controlled via PROFINET by two Siemens PLCs. All the tanks, kettles and plant components can be mutually connected by means of a system of 744 pneumatically activated process valves—controlled by eight ASi Masters from Bihl+Wiedemann. The ASi network also links together instruments and sensors that record the process data from each fermentation tank, such as the pressure, level and temperature.

OVERVIEW OF ASI BENEFITS

- Simple, low-cost commissioning
- Just one cable for data and power
- Noise-immune—ideal for safety-relevant equipment
- Cost-saving
- System- and manufacturer-neutral
- Simple to configure and expand
- Free topology—each slave can be located at any desired point

AS-INTERFACE—SIMPLE, EFFICIENT, INNOVATIVE

AS-Interface is a system and manufacturer-neutral technology. As a worldwide standardized bus system it **connects sensors and actuators** to a **host controller** over a common data transmission path.

AS-Interface is a standard for fieldbus communication which replaces parallel wiring and is based on the master-slave principle. The master exchanges data cyclically with the (up to) 62 connected slaves. Typically each slave can have four inputs for reading sensors, and four outputs for controlling actuators.

AS-Interface enables **simple installation, configuration and maintenance**. The simplified cabling minimizes wiring mistakes while at the same time offering free selection of network topology, along with added flexibility and ruggedness. The significantly reduced installation effort and expense make AS-Interface a **very cost-effective technology**.

The Safety at Work concept also allows the safety components—safe sensors and actuators—to be directly controlled in the safety monitor and seamlessly integrated into virtually any common automation system. Since the safe and non-safe signals are sent on the same cable, significant savings compared with conventional safety technology using parallel wiring can be realized in terms of cost and installation time, as well as increased safety, thanks to the transparency of the installation.

With more than **40 million installed nodes** and over 20 years of market experience, AS-Interface is one of the **most successful bus systems in the world**. The success of AS-Interface is based on the system-specific properties and the high level of cooperation among the companies involved with its development.

PIERCING TECHNOLOGY

The transmission medium is an unshielded, non-twisted pair, two-conductor flat cable which carries power and communications to the slaves, with a low current requirement. For consumers with a higher power requirement, such as motors or valve terminals, a separate flat cable is used for carrying supply voltage.

The sensors and actuators are generally connected using piercing technology. Here the insulation of the reverse polarity protected flat cable is pierced using two insulation piercing contacts—with no prior preparation necessary. This means slaves can be easily moved or added in the segment at any time.

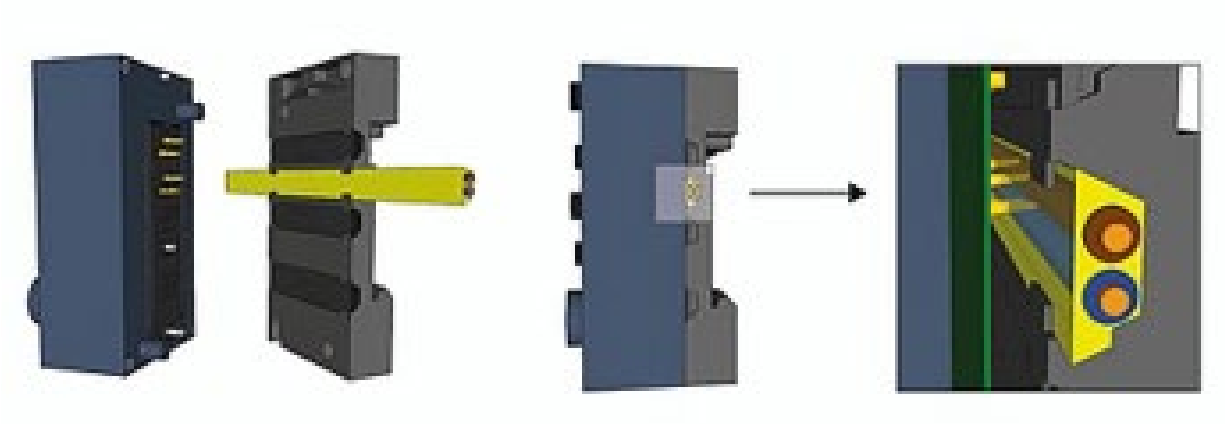

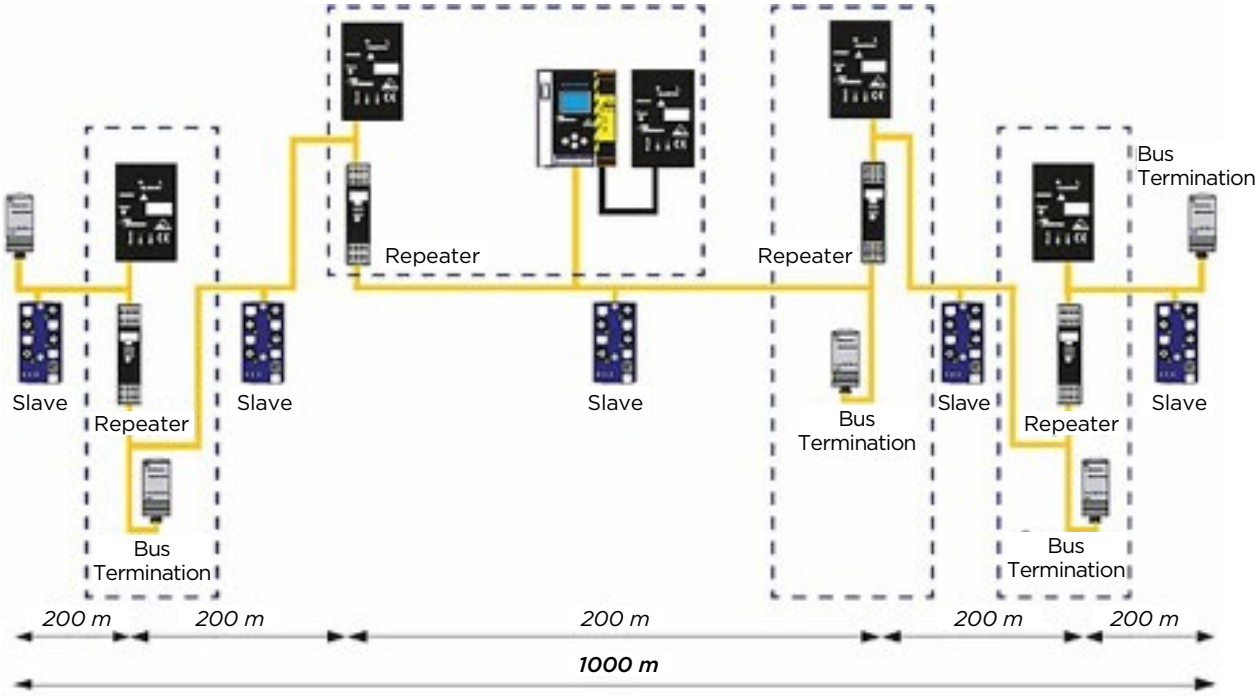

ADJUSTABLE CIRCUIT EXTENSION

ASi permits any bus topology. The total cable length is limited, but can be increased using repeaters, bus terminators or extenders.

When errors occur, diagnostic devices or masters with built-in diagnostics functions help to locate them in the network. If a slave fails it can be easily replaced. The slaves can then be automatically re-addressed by the master.

AS-INTERFACE. EFFICIENT BUS COMMUNICATION

AS-Interface has established itself as a standard for bus communication. This modern alternative to parallel wiring was developed for connecting actuators and sensors. It has proven itself not only in a wide range of industries, sectors and applications, but also with its numerous advantages. Learn about AS-Interface and discover how you too can benefit from the AS-Interface technology.

Advantages of AS-Interface:

Just one cable for data and power

Parallel wiring, the geometry of the flat cable also prevents polarity reversal.

Simple cable piercing technology

Secure and errorless installation of the components is possible without any training. The installation cost and effort are markedly reduced. ASi modules are also easy to add and move.

Freeform technology

The network topology is completely customizable. Tree, star, ring or line structures are all possible configurations.

High productivity, efficiency and safety—advantages of AS-Interface

The ASi technology is compatible with virtually any common fieldbus system. It features not only fast and flexible installation that allows new nodes to be connected without cumbersome cable assembly, but is also simple to expand. The user friendliness of AS-Interface ensures that the system can be operated and maintained without additional training or specialized service personnel and because it is compatible with any topology, you can implement cable structures that correspond to the mechanical layout of your system. Standardized profiles allow for simple integration of new slaves and compared with parallel wiring, AS-Interface saves you an enormous amount of time in planning, installation, expansion and service. Certified products ensure manufacturer-neutral compatibility.

FUNCTIONAL SAFETY

Safety aspects are playing an increasingly important role in automation solutions – especially where the safety of personnel is impacted by hazardous movements. Development in Safety at Work are therefore always state-of-the-art. This pertains to the various safety monitors and their

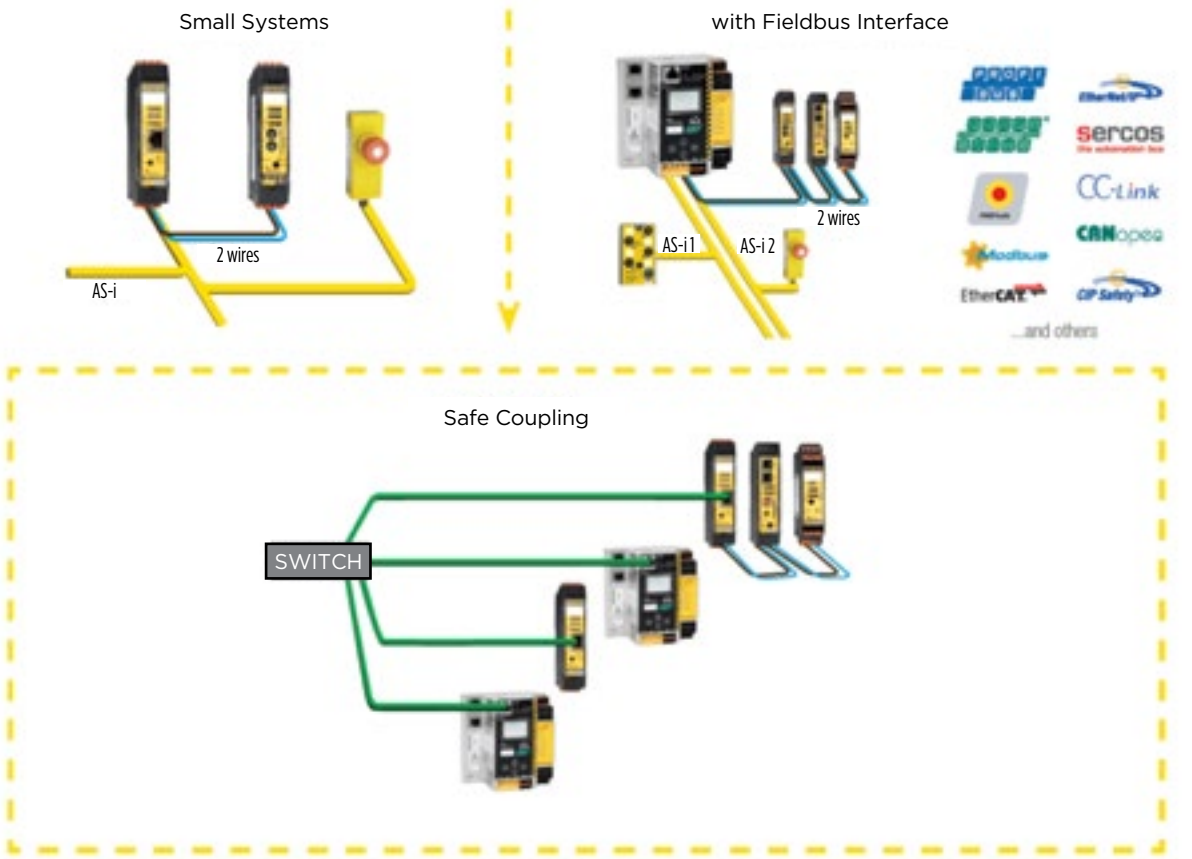

software for controlling the safety technology, as well as the connected safety slaves, regardless of whether these are e-stop buttons, photoelectric barriers or safe speed monitors. Customers are always benefitting from the newest innovations and highest level of safety.

Speed monitors monitor stopped condition, speed, speed range and direction, as well as shaft break, belt drift and slip. AS-Interface products are also used to safely monitor the brake ramp, end position and position ranges.

SAFE LINK

Technologies such as Safe Link, for safe coupling between safety monitors, are used to simply and flexibly connect multiple ASi networks and even safe controllers. In contrast to conventional links which require complex wiring, are error-prone and hard to manage, these technologies enable safe and simple linking over Ethernet.

Controlling the safety technology directly in the gateway relieves the burden from the fieldbus and enables free choice of sensors and actuators.

The benefits to you:

- Cost savings from simple wiring
- Elimination of an additional safe controller
- Relieves the fieldbus
- Significantly less likelihood of mistakes compared with conventional parallel wiring

AS-INTERFACE SYSTEM DATA

- Master-Slave principle
- No limitations for the structure
- Data and power on one, two-conductor cable
- Medium: unshielded ASi cable 2 x 1.5 mm^2, transports signals, data and power (up to 8A)
- Typically, four inputs and four outputs per module, other combinations possible
- Products with various enclosure ratings for any application, from control cabinet installation to use in harsh industrial surroundings
- Cable length can be extended using repeaters, bus terminators or extenders
- Simple commissioning
- Electronic address setting over the bus
- Fully downward compatible

FIELDS OF APPLICATION

More and more companies from a wide range of sectors are profiting from automating their plants using AS-Interface. This open bus system is widely used in industrial automation, material handling and in machine engineering.

Simple to install, configure, operate and expand

Efficient — it's rugged, noise immune, diagnostics-friendly and cost-effective

Innovative — just one cable is used for data and power, can be configured to any topology, highly compatible

MANY PRODUCTS FOR MANY USES

The product scope of AS-Interface includes masters/gateways and non-safe modules and slaves as well as numerous safety components, bus couplers, software, accessories and high-performance services. Clicking on the respective product type in the product descriptions takes you to examples of products offered by Bihl+Wiedemann.

Masters/Gateways

Bus Couplers / Master Simulators

Modules/Slaves

Software

Safety Components

Accessories

ASi-5: automation reinvented

By Bihl+Wiedemann

A SIMPLE ROADMAP FOR THE FUTURE

ASi-5 is the latest innovation stage of AS-Interface (ASi), a globally standardized fieldbus system for the first automation level. ASi connects sensors and actuators with a controller via a single two-conductor profile cable. The yellow ASi cable transmits power and data at the same time.

The proven main benefits of ASi are, among others, dramatically less wiring, free choice of topology and cost-efficient integration of safety on the same infrastructure. In addition, compared to other fieldbus systems, ASi needs no connectors for data and power integration.

ASI-5: GREAT DATA BANDWIDTH, SHORT CYCLE TIMES

ASi-5 now enables you to transmit larger data volumes significantly faster. Great data bandwidth and short cycle times – comparable to Ethernet systems – allow for many new possibilities with AS-Interface. For example, ASi-5 now transmits analogue values much faster and it is easier than ever to integrate smart sensors, e.g. IO-Link sensors with up to 32 bytes.

PROVIDES VALUABLE INFORMATION

More than anything, Industry 4.0 and increasing digitalization require a good data layer. As they supply additional data, smart sensors are becoming more and more important. This makes ASi-5 a key building block for your journey to the digital future, because there was

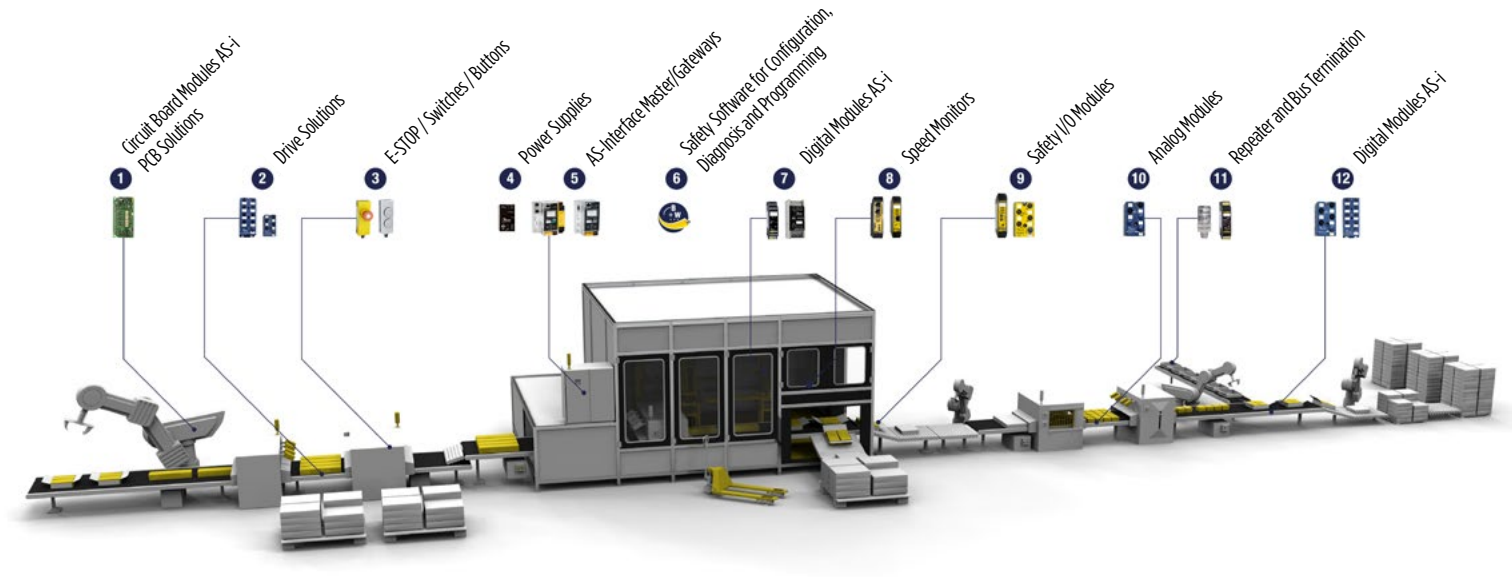

one prevailing reason for evolving AS-Interface: being able to transport more and more data, without restrictions, to where they can yield valuable information. Using the integrated OPC UA servers of our ASi-5/ASi-3 Gateways, you can even do this directly and in parallel with the fieldbus.

AN AFFORDABLE ALTERNATIVE

Another benefit of the significantly higher performance: Our new ASi-5 modules enable the cost and time-efficient collection of numerous inputs and outputs in one place, making the modules an affordable alternative to other fieldbus solutions.

COMPATIBLE WITH ALL ASI GENERATIONS

ASi-5 is compatible with all ASi devices and components therefore you can easily use ASi-5 slaves together with ASi slaves of any previous generation – in existing as well as in new ASi networks because all ASi generations work in parallel on the same cable.

To use ASi-5 slaves all you need is a Bihl+Wiedemann ASi-5 / ASi-3 Gateway. If you already use ASi there is no need to replace existing ASi slaves. Simply connect additional ASi-5 slaves, for example in system sections with additional demands on speed, data volume or I/O density.

Currently, the Gateways are already available in different versions, e.g. for EtherNet/IP, PROFINET or EtherCAT. We offer them either as Single Master or as Double Master version with or without integrated Safety Monitor. For the ASi-5 launch, this gateway

is available in two versions: for PROFINET and EtherNet/IP. Both gateways have a double master and an integrated safety monitor. An OPC UA server is integrated into each version indicated above as well as in other ASi-5 gateway protocols, making it possible to easily transmit data directly from the field level to Industry 4.0 applications.

Without ASi-5 slaves, the new ASi-5 / ASi-3 gateways retain all the same operations as earlier Bihl+Wiedemann gateways because the ASi-3 part remains unchanged.

By the way, compatibility has been an AS-Interface trademark for over 20 years. This protects not just your investments but each new ASi generation also makes you more future-proof.

ASI-5: YOUR ADVANTAGES AT A GLANCE

- Benefit from all well-proven ASi strengths ...
- Transmit data and power in a single two-core flat cable
- Freely choose your topology without costly switches (tree, ring, star, line)
- Cost-efficiently integrate safety on the same infrastructure
- Easily install and expand your system using ASi piercing technology
- Certified products for manufacturer-independent compatibility
- Affordable noise-resistant system that does not require shielding

...and from the new powerful ASi-5

- 1.27ms cycle time for up to 384 input and 384 output bits
- 16-bit I/O data and profiles with up to 32 bytes of process data for each slave
- Easy integration of smart sensors and actuators such as IO-Link
- ASi-5 is compatible with all earlier ASi generations for combined use of different ASi slaves
- ASi safety and ASi-5 easily work together
- Highly economical because of reduced costs per input / output
- Advanced diagnostics for predictive maintenance

The next generation of AS-Interface

Since the 1990s, AS-Interface (ASi) has become an integral part of modern industry, with more than 40 million installed notes worldwide. Customers can benefit from the economically reasonable fieldbus/wiring system for the first automation level, used to easily, reliably and economically connect sensors and actuators and attach them to the higher control level.

The yellow ASi cable transmits power and data at the same time. The easy wiring process is doable even without training. Now a new generation of the ASi standard has been presented for the new requirements in times of Industry 4.0. ASi-5 easily enables faster transmission of larger data volumes and effortless integration of intelligent IO-Link sensors.

Fabricio Granados
Director of International Sales, Bihl+Wiedemann

Fabricio Granados, director of international sales at Bihl+Wiedemann, shares his candid thoughts about the advantages of ASi-5 and how easy it is to use ASi-5 slaves together with ASi slaves of any previous generation.

Q: Why is it time for the next generation of AS-Interface?

A: The main reason for evolving ASi was the changed situation for our customers. With the rise of a connected digital industry, more data needs to be transmitted. ASi-5 now allows us to transfer larger quantities of data at higher speed, while making integration of intelligent IO-Link sensors easier than ever.

Intelligent sensors and actuators are responsible for an increasing number of control functions in distributed systems. ASi-5 was developed by seven renowned automation companies, including Bihl+Wiedemann.

The complete project took more than 200,000 developer hours. Bernhard Wiedemann, CEO of Bihl+Wiedemann, was the technical leader of this cross-company development group.

Q: Is ASi-5 a completely new technology?

A: No, ASi-5 is the evolution of the well-proven AS-Interface standard. ASi-5 offers all the advantages that have already made ASi so special in the past.

The greatest challenge during the development of ASi-5 was to keep all the known advantages of ASi. AS-i 5 had to be at least as good as ASi-3 in every aspect.

Customers still benefit from the simple wiring scheme with just one cable for both power and data, the ability to connect slaves to any desired location of the yellow profile cable and the high flexibility due to the use of application-specific slaves.

ASi-5 offers both a high bandwidth—process data size from 16 bits to 32 bytes per slave—and short cycle times—up to 384 digital inputs and 384 digital outputs in just 1.27 ms—making it possible to transport more and more data, without restrictions, to where they can yield valuable information.

Q: In what way does the higher data bandwidth influence the usability of ASi-5? Is it more complex now for the users?

A: The main advantages of AS-Interface are incorporated in the new generation. Long story short, our products are still as easy to use as before. Each network is controlled by one ASi-5 master that transmits data via fieldbuses such as EtherNet/IP or Profinet to a central control system or via OPC UA to the cloud.

The connection technology, such as connectors and wires, stays the same. Additionally, to the same usability, the user benefits from increased diagnostics; for example, a channel diagnostics is possible now.

This is a new generation of AS-Interface, which means that the technology still needs to prove its usefulness. When are the first ASi-5 products available?

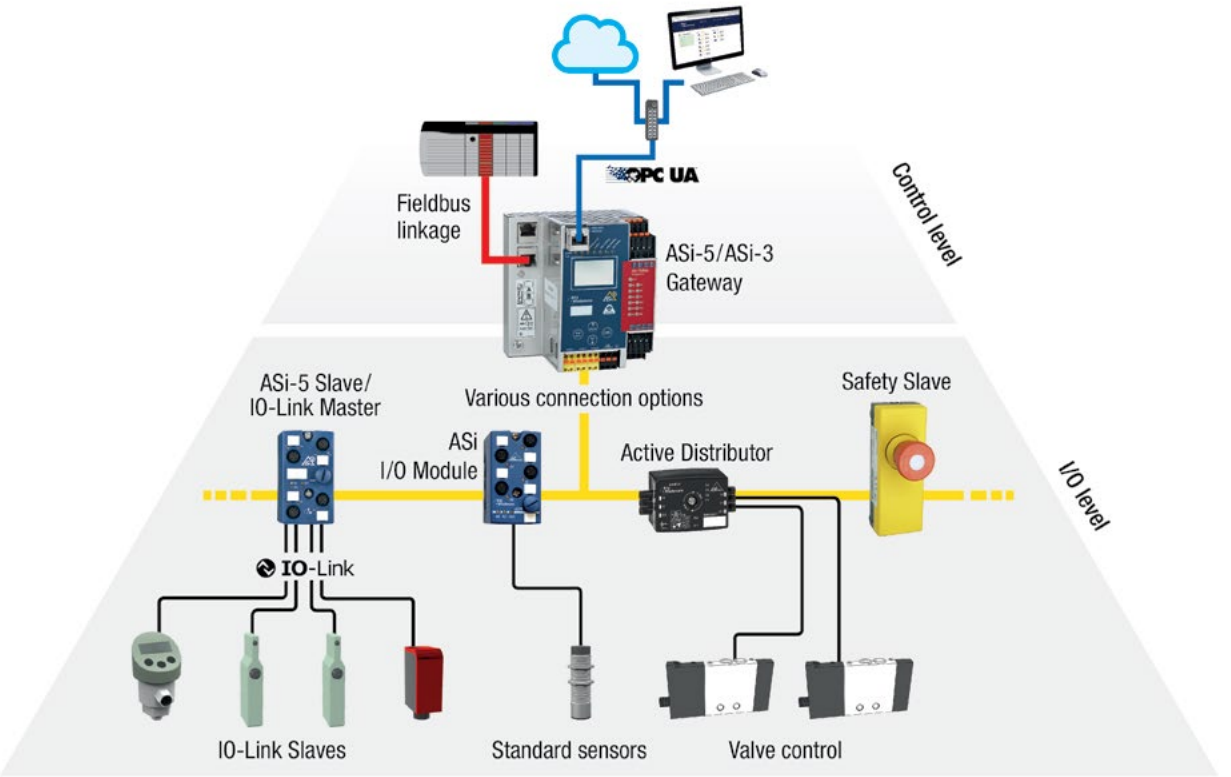

IO-LINK
ASi-5 now allows us to transfer larger quantities of data at higher speed, while making integration of intelligent IO-Link sensors easier than ever.

Bihl+Wiedemann is already offering the first ASi-5 gateways and modules. Our goal is to develop quickly a wide product range to meet all of our customers' needs. The all-rounders in our portfolio are three new gateways that run on ASi-5 and ASi-3 and thus are able to communicate on both networks. If you want to read more on the technical specifics you can find the information on our website.

As with all new technologies, it will take some time to develop all products that are available on ASi-3. ASi-5 enables a more efficient incorporation of intelligent sensors in the AS-Interface, which was worth all the invested effort. Many of the new features will be playing an increasingly important role as digitalization continues. This is an iterative process, which I am very much looking forward to see what will come out of it.

Q: Can customers use their existing AS-Interface devices together with ASi-5 products?

A: The greatest advantage of ASi-5 is that it's completely compatible with all earlier ASi devices and components. ASi-5 slaves can be combined with ASi slaves of any generation in existing as well as in new ASi networks.

All ASi generations work parallel on the same cable—intelligent slaves, standard slaves and safety slaves on one network. In an existing ASi network, you can simply connect additional new ASi-5 slaves and easily continue to use existing ASi slaves. To use ASi-5 slaves all you need is a new Bihl+Wiedemann ASi-5 / ASi-3 gateway.

Here's another advantage: As before, AS-Interface in its ASi-5 expression remains a standard that guarantees compatibility between components of any manufacturer, not just the development partner. Any product with the ASi logo can work together with all the others in a common network and communicate seamlessly. Thus, for each problem there continues to be an ASi solution.

Q: In what applications is it worthwhile to switch to ASi-5 right now?

A: From our perspective that would be, above all, applications characterized by high transmission speeds or elevated data quantities—for example, at locations where much I/O data needs to be collected in a tight space. ASi-5 also makes incorporating intelligent sensors, such as IO-Link sensors, much easier. And the new, high-performance standard modules with up to 16 inputs can replace one or another expensive fieldbus solution in the field.

For more information about Bihl+Wiedemann and its AS interface (ASi) devices for automation and safety equipment, visit www.bihl-wiedemann.de/us/asi-5.html.

Cyclic data and sensor integration

ASi-5 Slave/IO-Link Master with four ports integrates sensors and actuators where needed

"The bus system AS-Interface (ASi) and IO-Link with its point-to-point wiring are ideal partners on the field level," says Jan Melter, head of marketing at Bihl+Wiedemann. "ASi is a simple, robust and cost-efficient way to connect sensors and actuators in the field with just a single profile cable. With the ASi-5 Slave/IO-Link Master with four ports, intelligent IO-Link sensors and actuators can now also be integrated into ASi networks, right where they are required."

The yellow ASi cable transmits power and data at the same time. Important benefits of ASi are drastically reduced wiring effort, free choice of topology and cost-efficient integration of safety on the same infrastructure, as well as other things. In addition, ASi doesn't need any plugs for the connection of data and power.

ASi-5 is the latest generation of the globally standardized fieldbus system for the first level of automation. "It replaces centralized solutions with complex parallel wiring, as well as field devices with expensive Ethernet-based fieldbus interfaces," explains Melter.

As former generations, ASi-5 was again jointly developed by multiple manufacturers. The result is an extension to the sophisticated ASi technique with high data bandwidth and the short cycle times. This opens up new options, such as transmitting analog values faster and making it easier to integrate IO-Link sensors with up to 32 bytes.

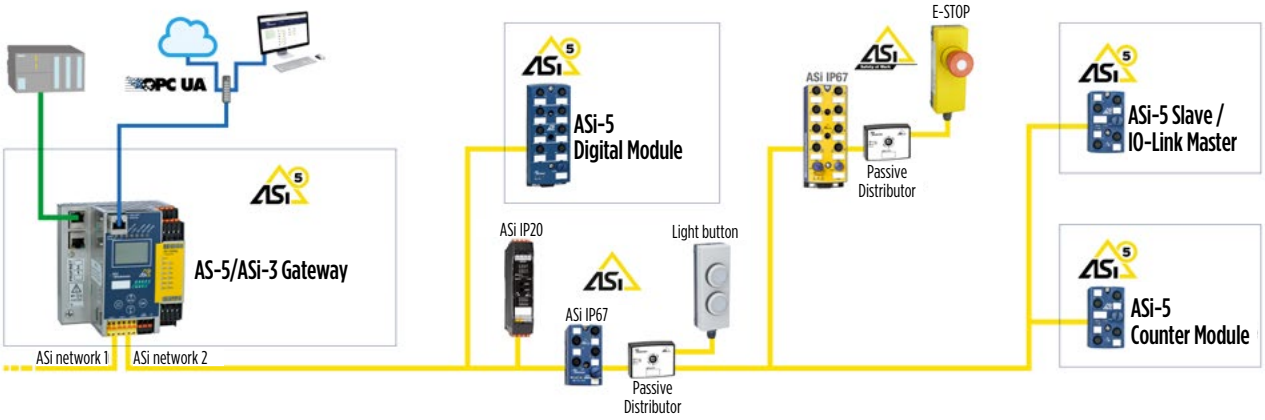

"IO-Link is a perfect way to give sensors and actuators some kind of intelligence, as it provides the interface for giving additional diagnostic data," says Melter. "In order to connect the sensors and actuators in a simple, robust and cost-efficient way, ASi is the perfect match." ASi-5 also is backward-compatible, so slaves of multiple generations can be combined in existing or new ASi networks by using the Bihl+Wiedemann ASi-5/ASi-3 Gateways.

The ASi-5 Slave/IO-Link Master with four ports allows intelligent IO-Link sensors to be integrated in the ASi network, right where they're needed. The ASi-5 slave can cyclically transmit up to 32 bytes of I/O data. In default mode, the Bihl+Wiedemann ASi-5 Slave/IO-Link Master transmits 8 bytes—2 bytes/port—in 1.27 ms.

"The all-new ASi-5 as the latest generation of the globally standardized cabling system gives the ASi-5 Slave/IO-Link Master power to transmit the rising amount of cyclic data, as well as acyclic diagnostic data," explains Melter. "We are talking about up to 16-bit cyclic data per port in 1.27ms."

The ASi-5 Slave/IO-Link Master is available rated IP67 with M12 connectors and IP20 with terminals. Both offer two Class A and two Class B IO-Link ports in one housing, including power supply of IO-Link ports out of the auxiliary, as well as passive-safety with a performance level up to PLe.

Configuration of IO-Link sensors and actuators is easy and convenient using the ASi Control Tools360/ASIMON360. With the live view the parameters can be set and changes observed directly over the network. Even in case of a sensor fault the system is easy to use, as a new sensor will be parametrized automatically exactly like the replaced one.

"With the extended diagnostic information coming with most IO-Link modules, the industry has the base of data available for what one could call Industry 4.0 or digitalization," says Melter. "Most of the Industry 4.0 applications rely on these data, for example, big-data analysis and predictive maintenance. With the integrated OPC UA server, the Bihl+Wiedemann ASi-5/ASi-3 Gateway also comes with the perfect interface to easily have access to all the collected data."

In 1995, the first ASi Master certified by the AS-International Association was introduced by Bihl+Wiedeman. ASi-5 products were introduced by Bihl+Wiedemann in 2018.

FOR MORE INFORMATION

Call 616/345-0680, email mail@bihl-wiedemann.us or browse to www.bihl-wiedemann.com.